MIMIK 20

Performance Lighting





Ceiling-, wall- and post- mount series. Fixtures consist of:

- Multi-step powder-coat painting process, optimized against UV rays and corrosion.
- Copper-free precision die-cast aluminum housing and mounting plate.
- Extra-clear, flat, tempered silk-screened soda-lime glass diffuser.
- Micro-prismatic patterned, flat, tempered silk-screened soda-lime glass diffuser (FLAT versions).
- Custom molded, anti-aging gasket(s).
- Stainless steel external hardware.
- Custom MCPCB utilized to maximize heat dissipation and promote a long LED life.
- High-transmittance transparent optics.
- Single (M) or dual (B) light emission.
- IESNA Type II light distribution.
- IESNA Type III light distribution.
- IESNA Type IV light distribution.
- DarkSky approved when ordered with single light emission only, and in 3000K or below.
- Input voltage: 120-277 V (50 / 60 Hz), integral 0-10 V dimming driver.
- Optional, integral, emergency battery-pack designed for a minimum operation of 90 minutes (EMPK versions).
- Customizing facade faceplate available for MIMIK FLAT versions (ordered separately).
- Consult factory for dimming options, custom finishes (please specify RAL color), and non-cataloged CCT (Kelvin) options.
- Optional clear plexiglass panel can be customized with logos for signage or wayfinding (LINE BOLLARD). Consult factory for more information.
- 5-year warranty.
- Marine Grade finish.
- Suitable for Natatorium applications.

IP 65 · WET · PRONTO · cULus LISTED · ADA COMPLIANT · 0-10 V · 90° · RAL · IK 06 1 J

FINISHES

- **AN-96** / Iron gray / Textured
- **GR-94** / Aluminum metallic / Textured
- **WH-87** / White / Textured
- **BK-81** / Black / Textured
- **RB-10** / Iron rust / Textured

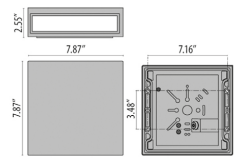

MIMIK 20 Standard

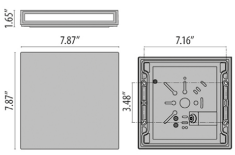

MIMIK 20 FLAT

Lumen Output	Wattage	2700K	3000K	3500K	4000K	5000K
MIMIK 20 T2	15W	1373	1385	1396	1408	1420
MIMIK 20 T2	26W	2233	2256	2274	2292	2310
MIMIK 20 T2 EMPK	15W	1373	1385	1396	1408	1420
MIMIK 20 T3	15W	1385	1396	1407	1418	1429
MIMIK 20 T3	26W	2255	2273	2291	2309	2327
MIMIK 20 T3 EMPK	15W	1385	1396	1407	1418	1429
MIMIK 20 T4	15W	1308	1319	1329	1340	1351
MIMIK 20 T4	26W	2132	2149	2166	2183	2200
MIMIK 20 T4 EMPK	15W	1308	1319	1329	1340	1351

Lumen Output	Wattage	2700K	3000K	3500K	4000K	5000K
MIMIK 20 FLAT M	14W	919	960	1001	1042	1083
MIMIK 20 FLAT B	25W	1847	1920	2012	2095	2178

Scan here for installation instructions

Performance in Lighting reserves the rights to make all necessary changes without prior notice.

Performance in Lighting - 2621 Keys Pointe - Conyers, Georgia 30013 - USA - voice 770.822.2115 - info.usa@pil.lighting
www.performanceinlighting.com

Rev. 08/28/2026

Order Guide - MIMIK 20

Performance Lighting

Order code example	M20-M-15W-3K-T2-AM-UNV-010V-EMPK

Series	Light Emission	Wattage	CCT	Distribution	Finish	Voltage	Dimming	Options/ Accessories
Wall Mount **M20** Standard **M20F** Flat (Note: flat housing only suitable for T2 distribution) Bollard 40" Standard Height **M20BOL** 40" bollard **M20LBOL** 40" line bollard **M20BOLxx** xx = bollard height (12" min to 40" max) **M20LBOLxx** xx = line bollard height (12" min to 40" max)	**M** One-Way **B** Two-Way	Standard Housing **15W** 15 Watt (max with EMPK) **26W** 26 Watt Standard (max) **XX** Specify wattage must be below max Flat Housing **14W** 15 Watt (M max) **25W** 26 Watt (B max) **XX** Specify wattage must be below max	70 CRI std. **27K** 2700K **3K** 3000K **35K** 3500K **4K** 4000K	Standard Housing (Note: Choose 1 for M and 2 for B) **T2** Type 2 **T3** Type 3 **T4** Type 4 Flat Housing Leave blank	**AM** Aluminum Metallic **IG** Iron Gray **IR** Iron Rust **WH** Textured White **BK** Textured Black **CC** Custom Color	**UNV** 120-277V	**010V** 0-10V Dimming Driver **ELV** 120V Dimming Driver	**EMPK** Integral 15W emergency battery back up (not available with flat housing or with phc/occ) **CWEMPK** Remote cold weather emergency battery backup -20ºC through 55ºC **FC** Facade cover **FRST** Frosted glass **EGR** Egress double housing **PHC-B** Photocell button (not available with EMPK **OCC** Occupancy sensor not available with EMPK **REM** Remote battery backup **CON2** Double-gang J-box, adaptor plate and 1/2" knockouts **CON4** Double-gang J-box, adaptor plate and 3/4" knockouts

CONSULT FACTORY FOR OTHER AVAILABLE OPTIONS NOT SHOWN ABOVE

Performance in Lighting reserves the rights to make all necessary changes without prior notice.
Performance in Lighting - 2621 Keys Pointe - Conyers, Georgia 30013 - USA - voice 770.822.2115 - info.usa@pil.lighting
www.performanceinlighting.com

Rev. 08/28/2026

40" Bollard option



40" Line Bollard option



OCC



Facade Cover

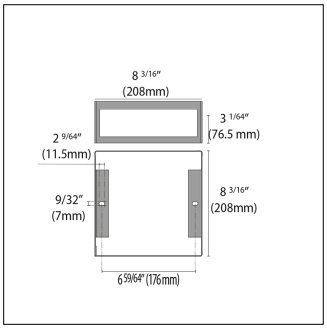

PHC-B



Egress Double Housing



CON2 (1/2")

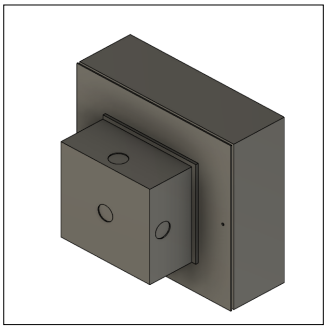

CON4 (3/4")

